Aim: To design the logic circuit for a simple traffic light control system for two roads. Define inputs and outputs and justify the logic.

Tools: CircuitVerse.

Theory:

A traffic light controller is a sequential logic circuit, meaning its output depends not just on current inputs, but also on its stored state (which road is currently green). This is what makes it different from a purely combinational circuit.

The circuit controls two roads, Road A and Road B, which are always in complementary states. When A is green, B must be red, and vice versa. A single state bit Q (stored in the D flip-flop) represents this: Q=1 means Road A is green, Q=0 means Road B is green.

Inputs

Signal	Name	Meaning
S	Sensor	1 = vehicle detected waiting on Road A
T	Timer	1 = current green phase has fully elapsed
E	Emergency	1 = override, force Road A green immediately

Gates And Their Operations

G1 — AND gate computes S · T. This ensures a phase switch only happens when both a vehicle is present and the timer has expired. If only one condition is true, the phase doesn't switch — this prevents premature switching and indefinite green phases.

G2 — OR gate computes (S · T) + E, producing the final SWITCH signal. The emergency input E bypasses the AND condition entirely — any emergency immediately triggers a switch regardless of the timer or sensor.

FF1 — D Flip-Flop is the memory element. It stores the current phase as bit Q. Every time SWITCH pulses HIGH (on the clock edge), Q toggles because Q' is fed back into D — making it behave as a T flip-flop (toggle flip-flop). This is the key sequential element of the circuit.

G3 — NOT gate inverts Q to produce RA (Road A Red). When Road A is green (Q=1), RA must be 0, and when A is red (Q=0), RA must be 1.

G4 — NOT gate inverts Q to produce GB (Road B Green). This is the same inversion as RA — in hardware, G3 and G4 can actually share a single NOT gate output since RA = GB = Q'.

Circuit Diagram:

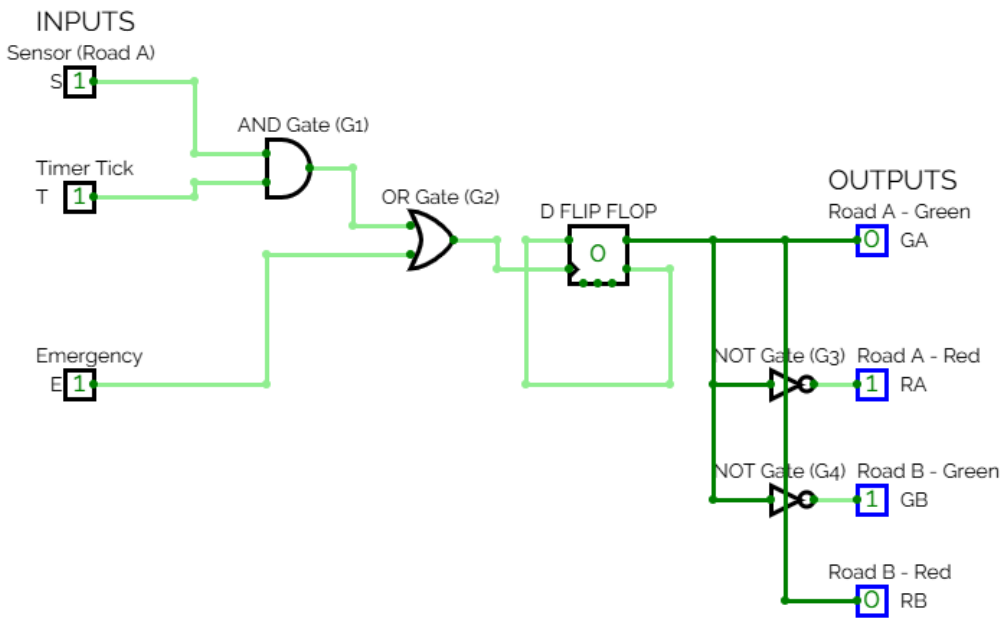

Output Equations:

GA = Q (Road A Green)

RA = Q' = NOT Q (Road A Red)

GB = Q' = NOT Q (Road B Green)

RB = Q (Road B Red)

SWITCH = (S · T) + E

Truth Table:

S	T INPUTS	E	SWITCH (S.T)+E	GA	RA	GB	RB	Road State
0	0	0	0	0	1	1	0	B Green
1	0	0	0	0	1	1	0	B Green
0	1	0	0	0	1	1	0	B Green
1	1	0	1	1	0	0	1	A Green
0	0	1	1	1	0	0	1	A Green
1	0	1	1	1	0	0	1	A Green
0	1	1	1	1	0	0	1	A Green
1	1	1	1	1	0	0	1	A Green

Conclusion: The logic circuit for a simple traffic light control system for two roads was designed and verified successfully.